780-053-SD-119

REVISION: 04/01/17

TEMPLATE FOR HALF SURFACE CONTINUOUS GEARED ALUMINUM HINGE

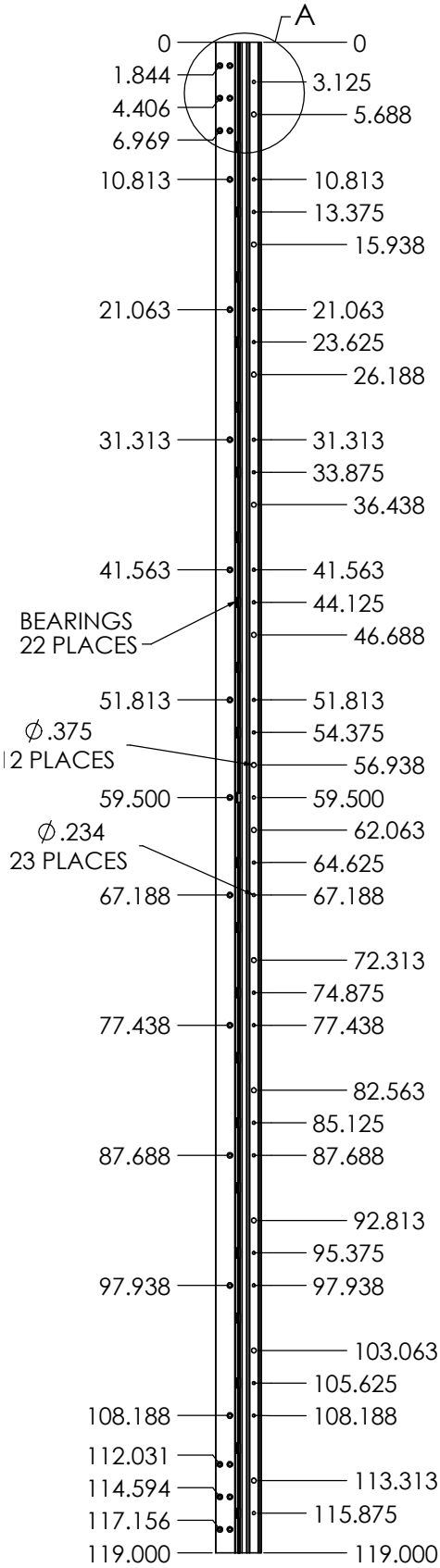

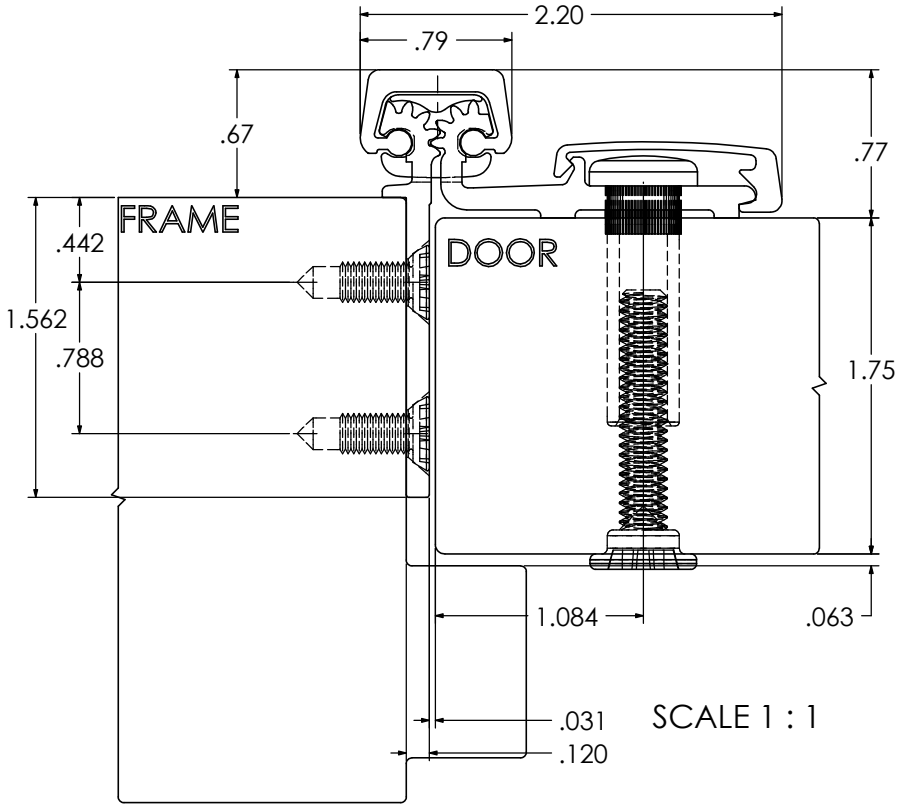

SCALE 1 : 1

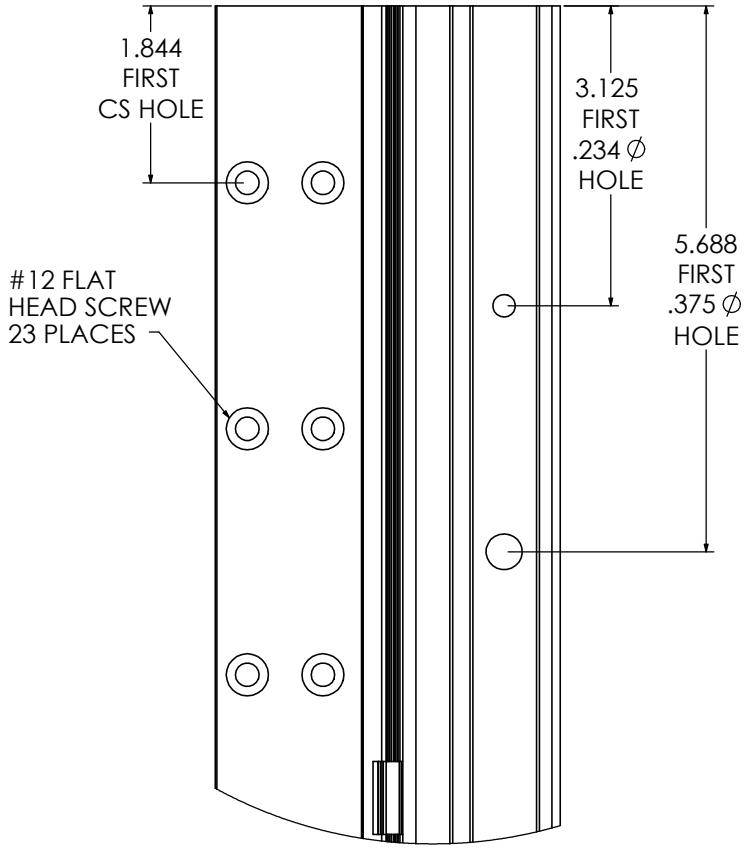

DETAIL A
SCALE 1 : 2