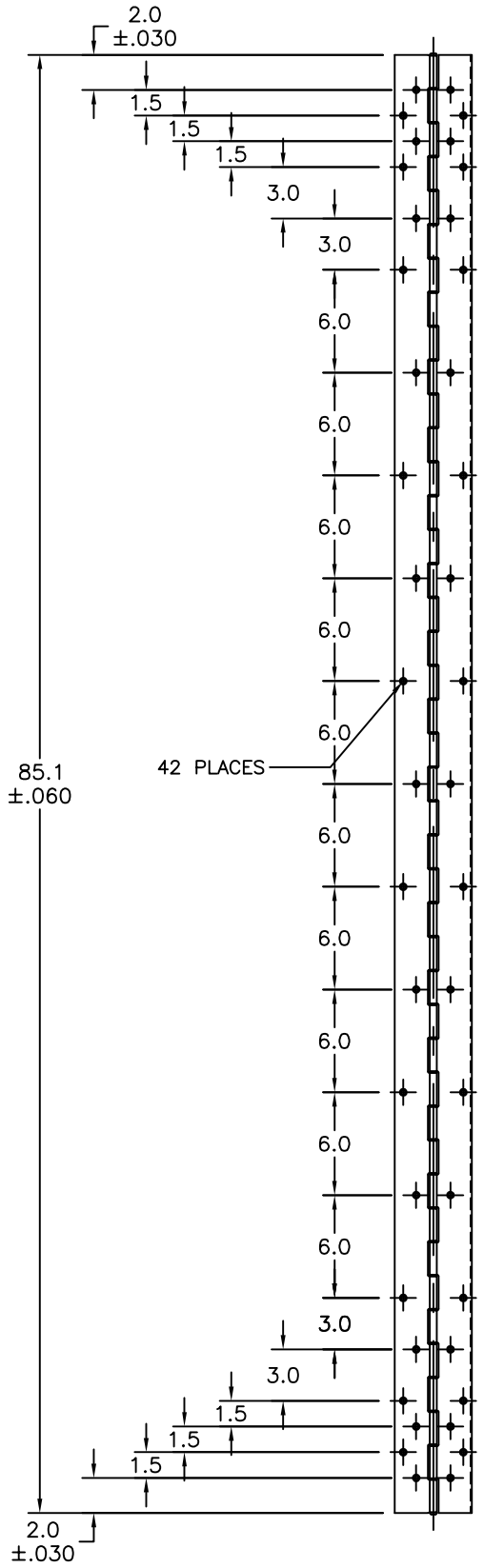

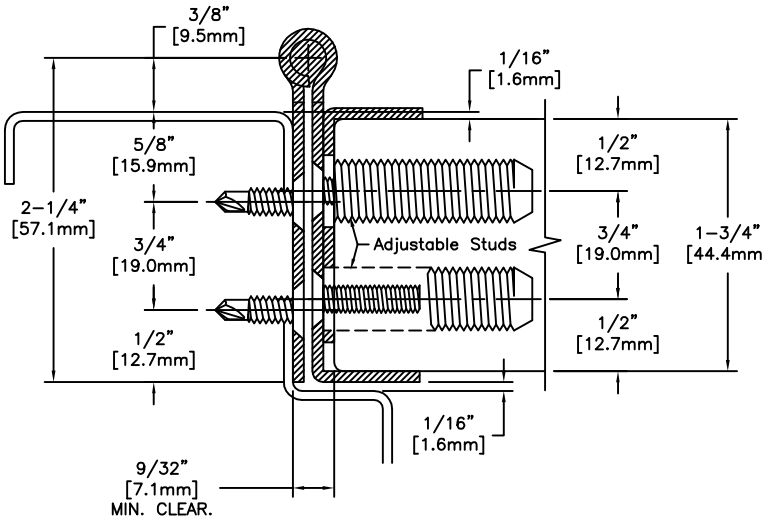

APPLICATION

SCALE: 3/4

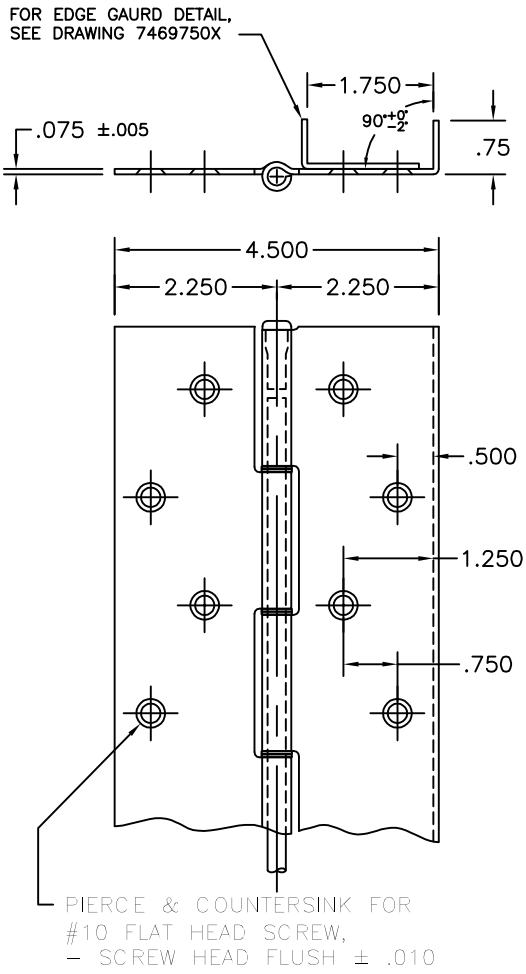

HOLE PATTERN DETAIL

SCALE: 3/8

NOTES:

- MATERIAL: .075 STAINLESS STEEL #304-2B FINISH
- ALL DIMENSIONS ARE IN INCHES
- DRAWINGS ARE NOT TO SCALE
- KNUCKLE PATTERN MY VARY

DET	QTY	SH	STOCK SIZE	MAT'L	REMARKS

Bill of Material

TOLERANCE (UNLESS NOTED)
X = ±.060
XX = ±.030
XXX = ±.015
ANGLE = ±2°
FRACTION = ±1/32

REMOVE ALL BURRS
BREAK SHARP EDGES .010 MAX

REVISIONS

HAGER COMPANIES
HAGER - MODEL 790-905 - 85"
CONTINUOUS STAINLESS STEEL HINGE

DATE 08-16-03 BY KBJ SCALE AS NOTED
FILENAME z:\stainless\templates\790905-85.dwg
DRAWING NO. 790-905 - 85"