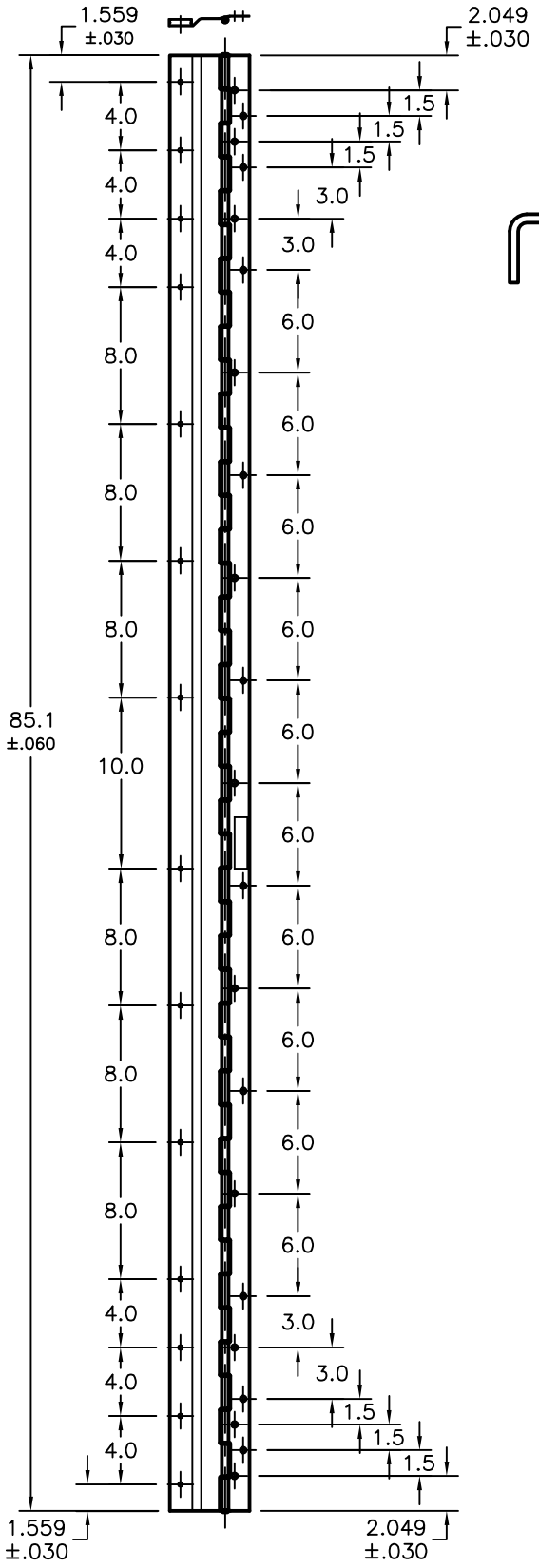

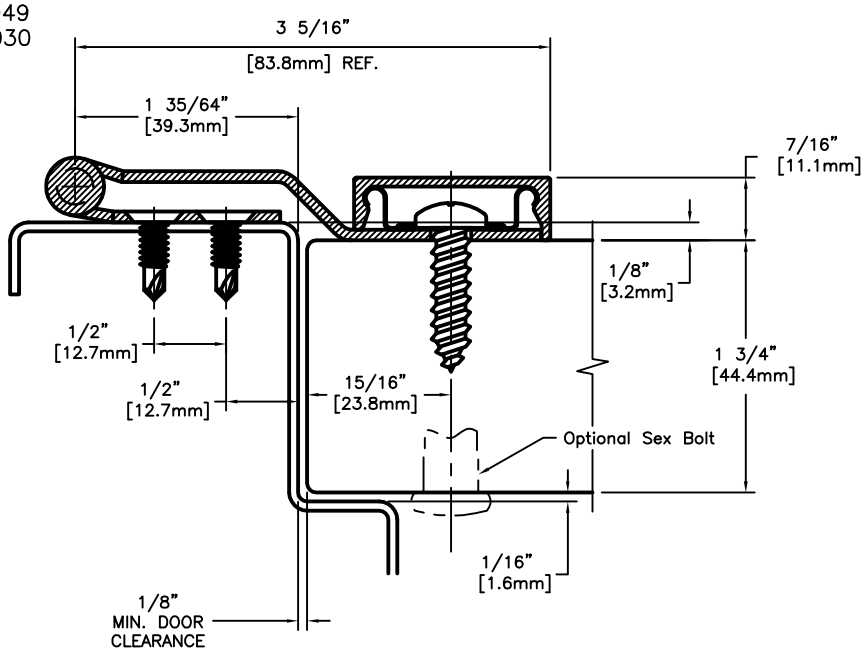

APPLICATION

SCALE: 3/4

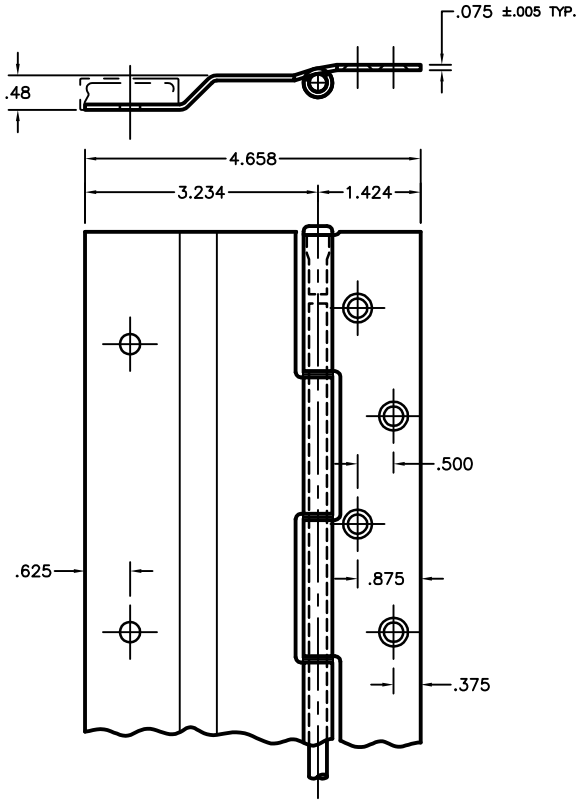

HOLE PATTERN DETAIL

SCALE: 3/8

NOTES:

- MATERIAL: .075 STAINLESS STEEL #304-2B FINISH
- ALL DIMENSIONS ARE IN INCHES
- DRAWINGS ARE NOT TO SCALE
- KNUCKLE PATTERN MY VARY

DET	QTY	SH	STOCK SIZE	MAT'L	REMARKS

Bill of Material

HAGER COMPANIES

HAGER – MODEL 790-909 – 85"
CONTINUOUS STAINLESS STEEL HINGE

DRAWING NO. 790-909 – 85"