780-155-HD-83

REVISION: 04/01/17

TEMPLATE FOR HALF SURFACE CONTINUOUS GEARED ALUMINUM HINGE

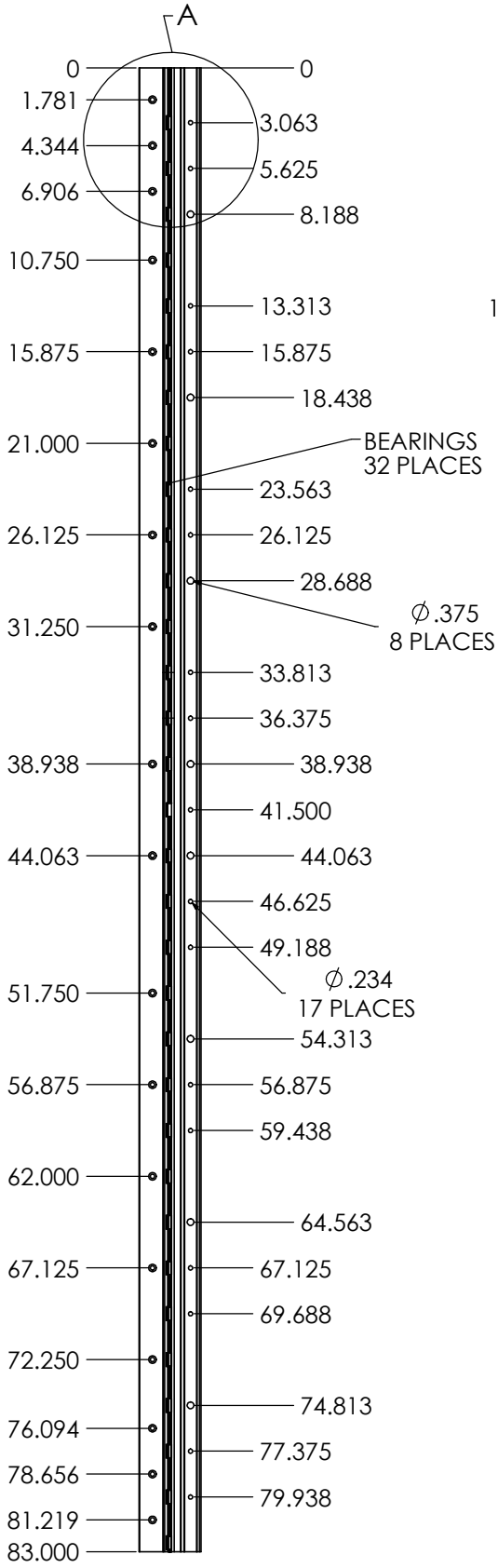

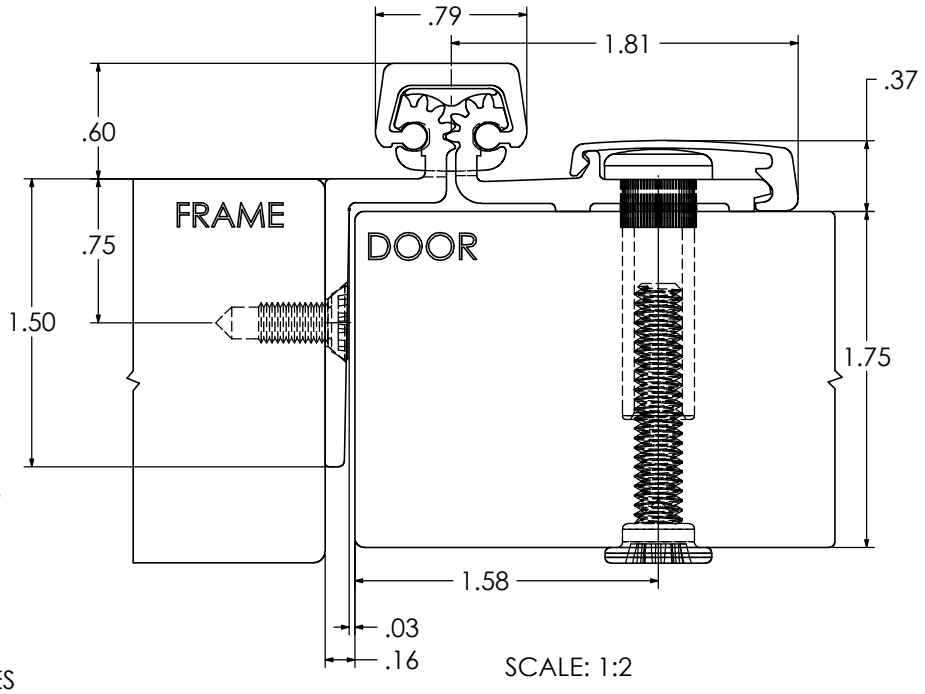

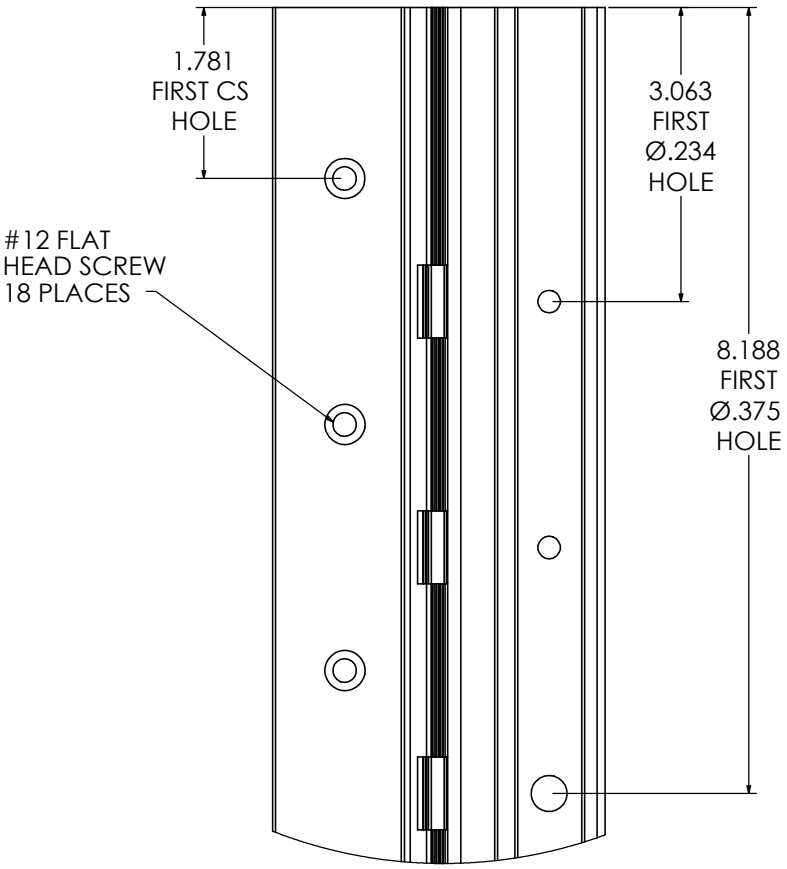

DETAIL A
SCALE 1 : 2