780-112-HD-95

REVISION: 04/22/16

TEMPLATE FOR FULL MORTISE CONTINUOUS GEARED ALUMINUM HINGE

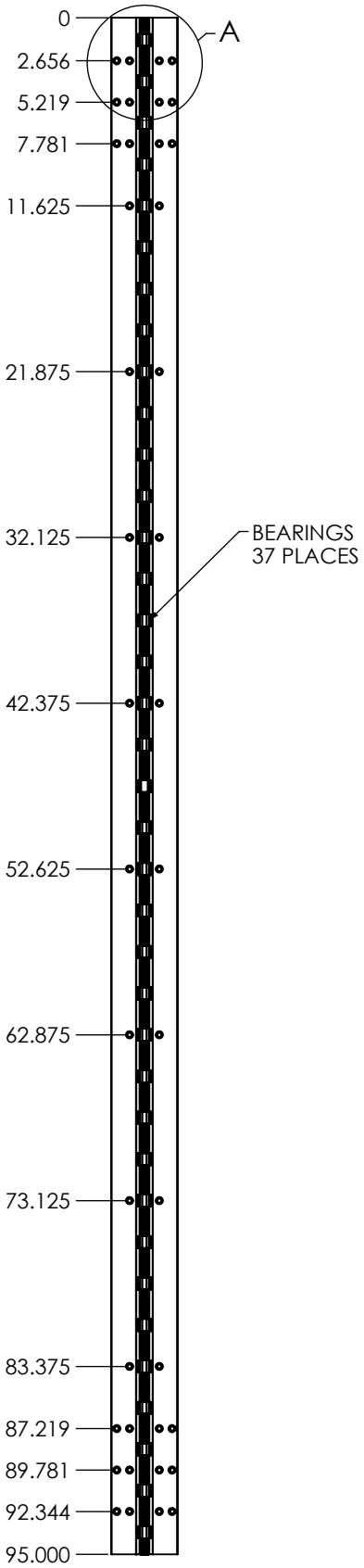

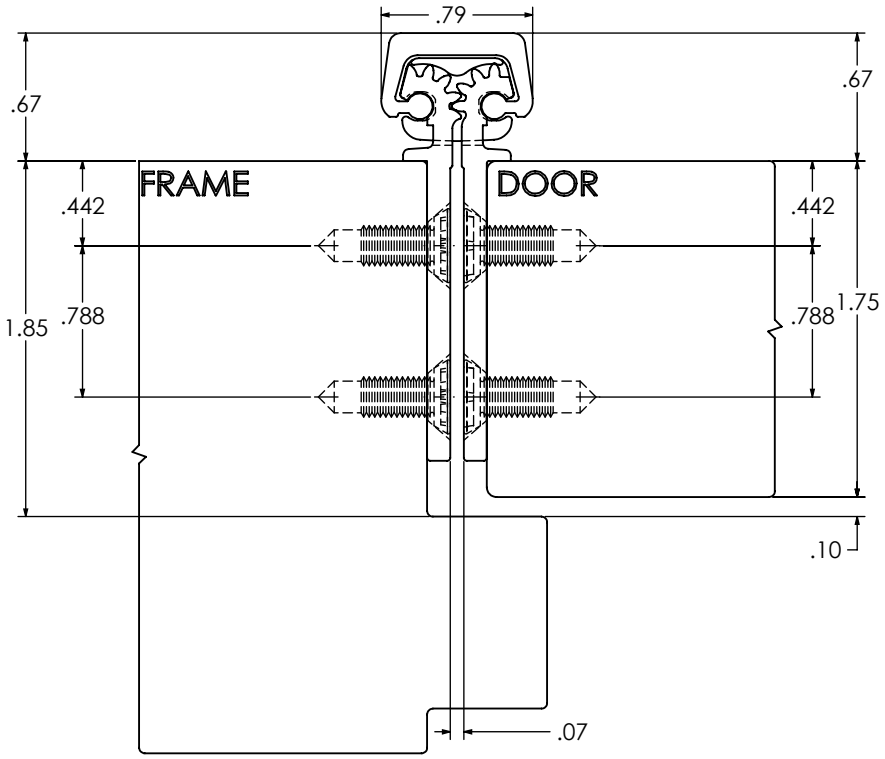

SCALE 1 :1

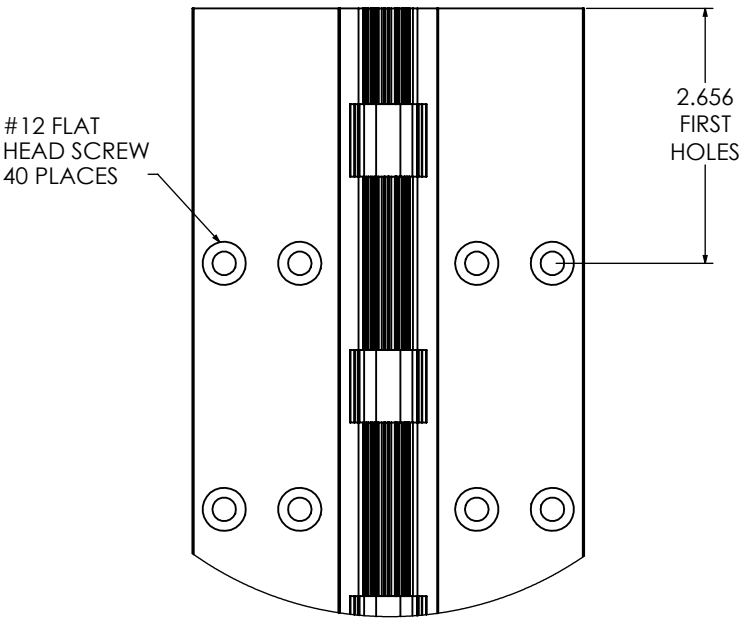

DETAIL A
SCALE 1 : 2