5100 SERIES Pull Side Stop/Hold Open Arm Door Closer Installation Instructions

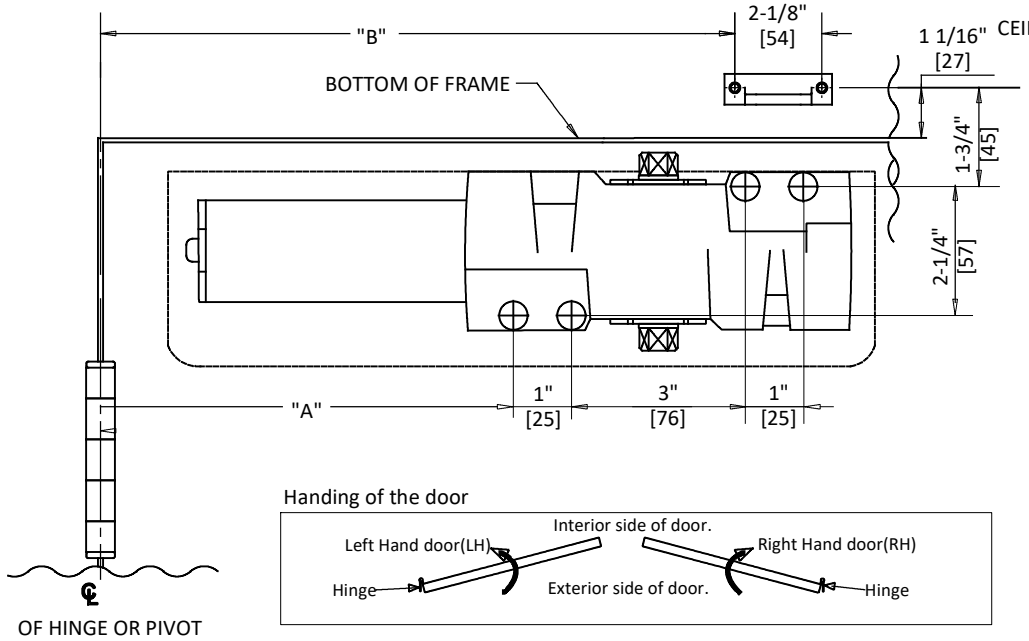

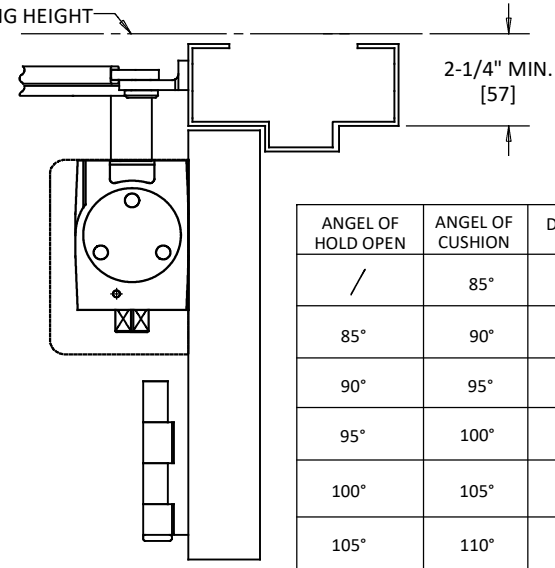

Right hand door illustrated.
Same dimensions apply to left hand door.
Measured from hinge Center.
Dimensions are in inches (mm)
Not To Scale

Handing of the door

ANGEL OF HOLD OPEN	ANGEL OF CUSHION	DIMENSION "A" (CLOSER)	DIMENSION "B" (ARM SHOE)
/	85°	8 3/8" [212]	12 7/8" [327]
85°	90°	7 15/16" [202]	12 3/8" [314]
90°	95°	7 9/32" [185]	11 5/8" [295]
95°	100°	6 7/8" [175]	11 7/32" [285]
100°	105°	6 1/2" [165]	10 13/16" [275]
105°	110°	6 3/16" [157]	10 9/16" [268]
110°	/	5 11/16" [145]	10 5/16" [262]

1 STOP ARM Installation

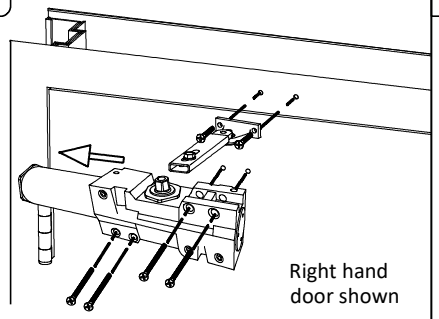

2

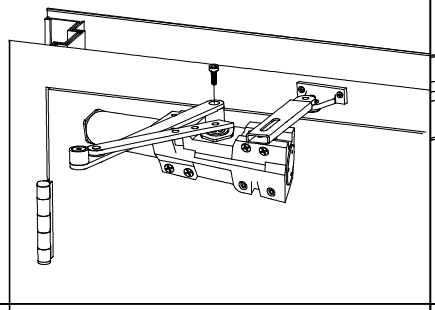

3

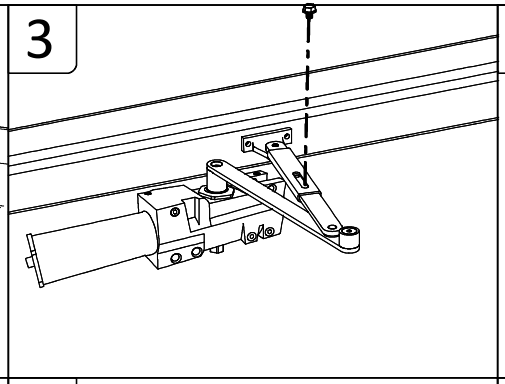

4

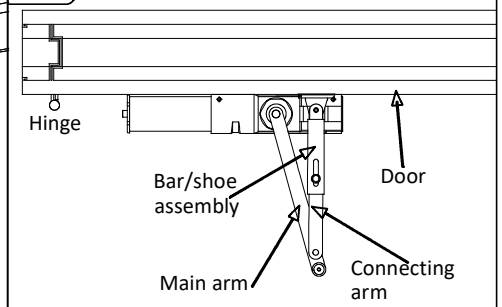

1 HOLD OPEN ARM Installation

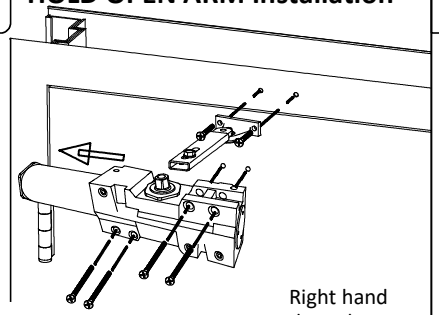

2

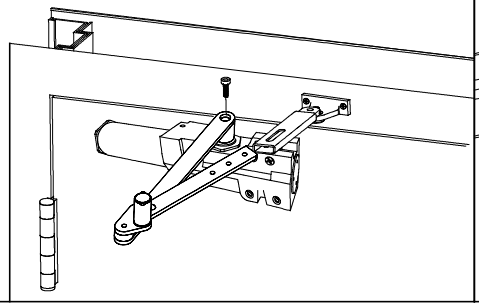

3

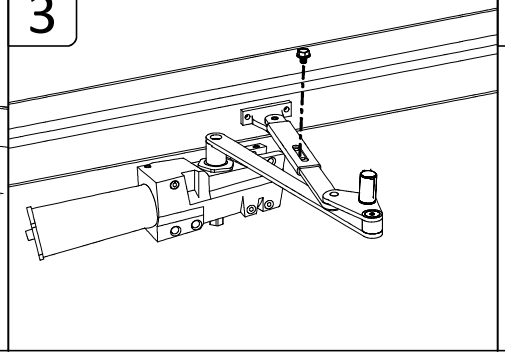
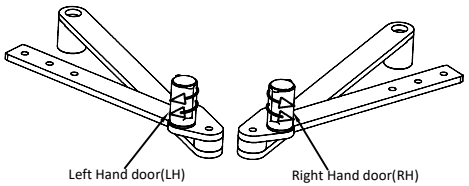
4 Hold open plate position