3617 Dummy Lever

Installation Instructions

Meets ANSI 156.2

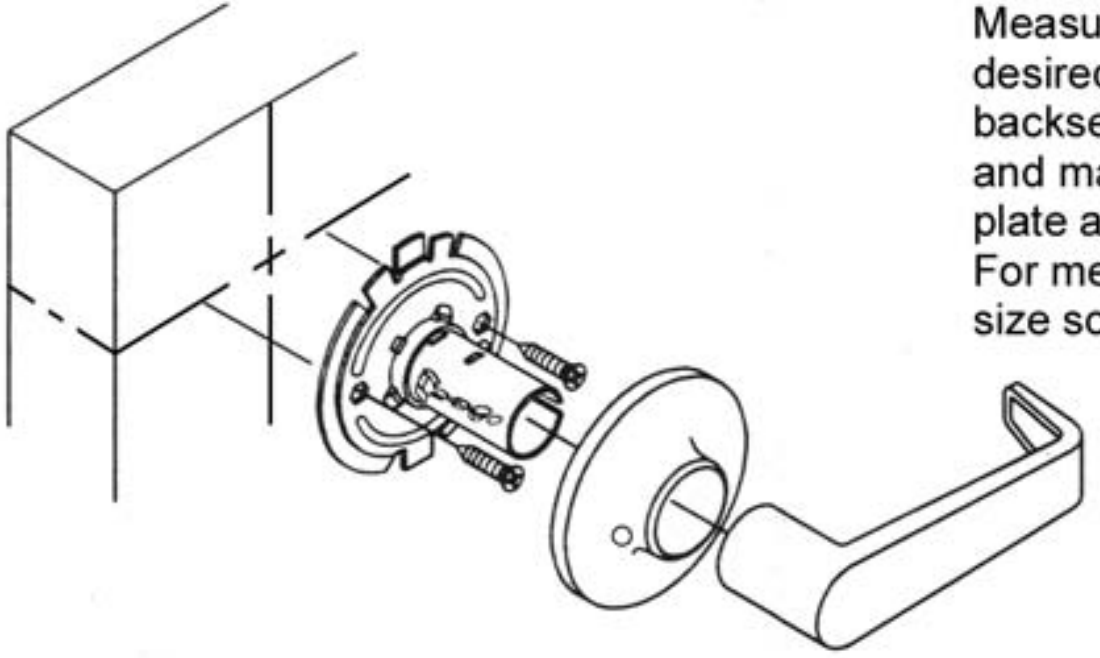

Measure centerline of lock height as desired from finished floor. Measure backset as desired from door edge and mark centerline. Press mounting plate against door and tighten screws. For metal doors, drill and tap for #8-32 size screw. Press on rose and handle.