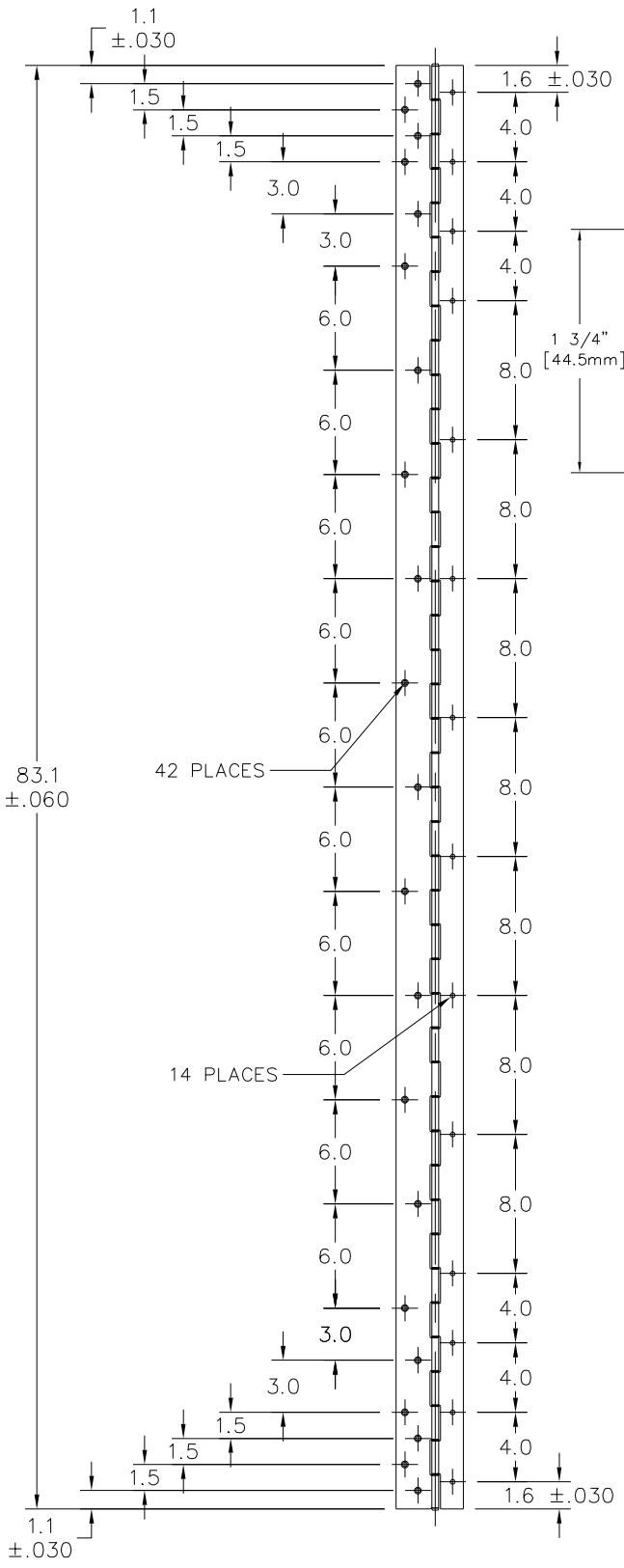

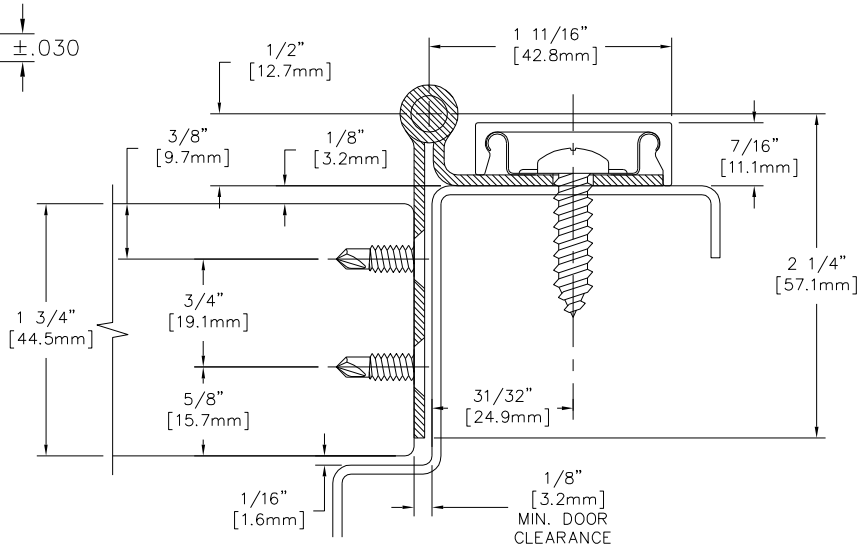

APPLICATION

SCALE: 3/4

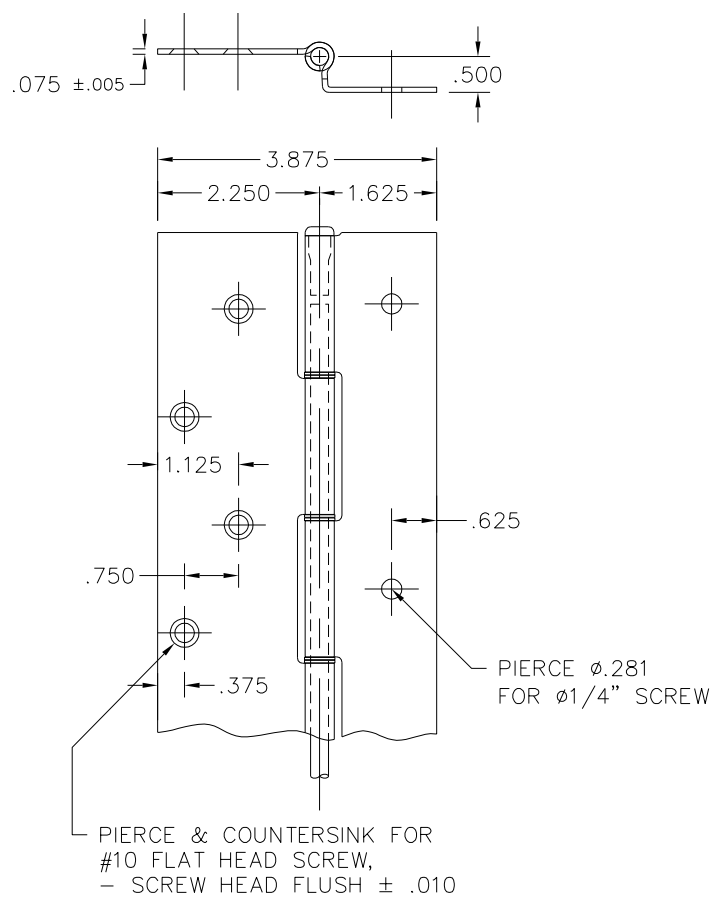

HOLE PATTERN DETAIL

SCALE: 3/8

NOTES:

- MATERIAL: .075 STAINLESS STEEL #304–2B FINISH
- ALL DIMENSIONS ARE IN INCHES
- DRAWINGS ARE NOT TO SCALE
- KNUCKLE PATTERN MY VARY

DET	QTY	SH	STOCK SIZE	MAT'L	REMARKS

Bill of Material

TOLERANCE (UNLESS NOTED)
.X = ± .060
.XX = ± .030
.XXX = ± .015
ANGLE = ± 2°
FRACTON = ± 1/32

REMOVE ALL BURRS
BREAK SHARP EDGES .010 MAX

REVISIONS

HAGER COMPANIES
HIGHWAY 78 WEST
P.O. BOX 3306
OXFORD, ALABAMA 36203

HAGER – MODEL 790–904 – 83"
CONTINUOUS STAINLESS STEEL HINGE

DATE 06–16–03 | DR. KBJ | SCALE AS NOTED
FILENAME z:\stainless\templates\790904–83.dwg
DRAWING NO. 790–904 – 83"