780-053-HD-95

REVISION: 04/22/16

TEMPLATE FOR HALF SURFACE CONTINUOUS GEARED ALUMINUM HINGE

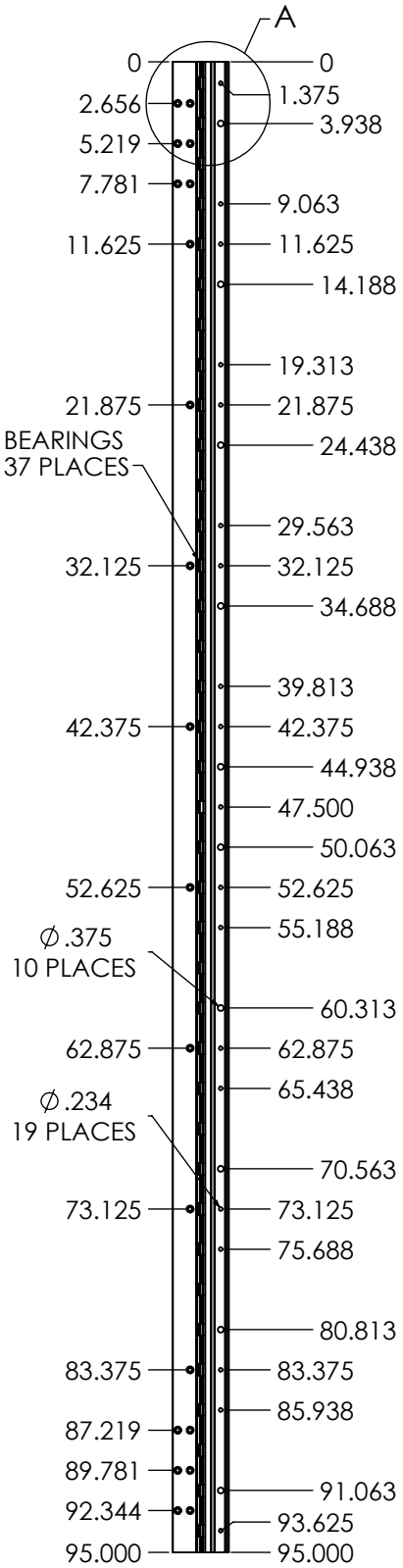

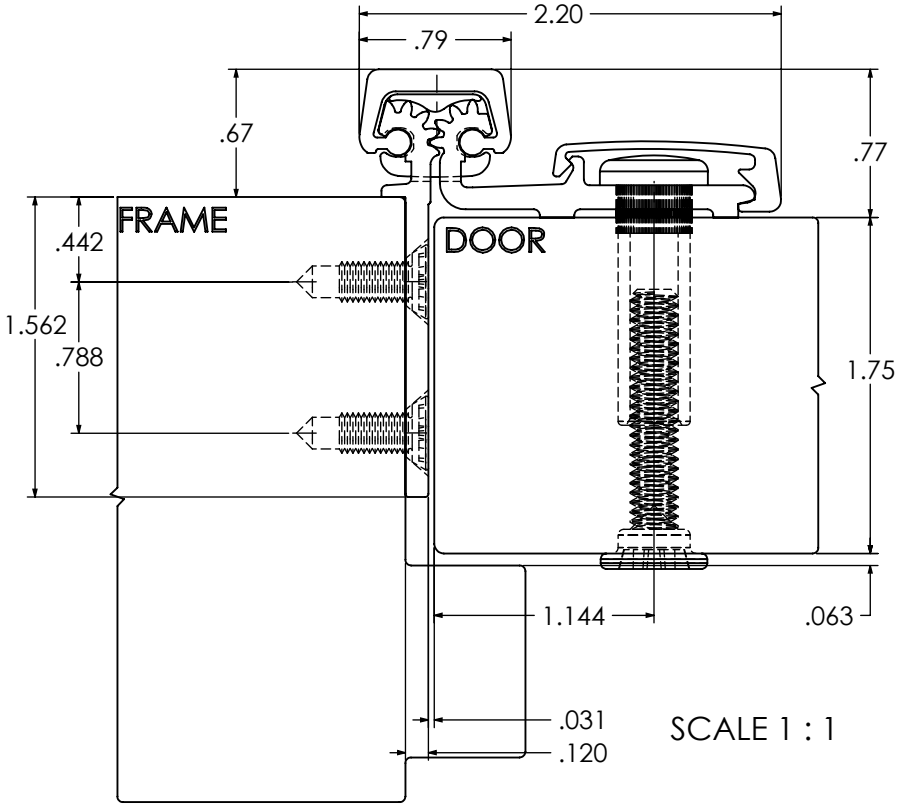

SCALE 1 : 1

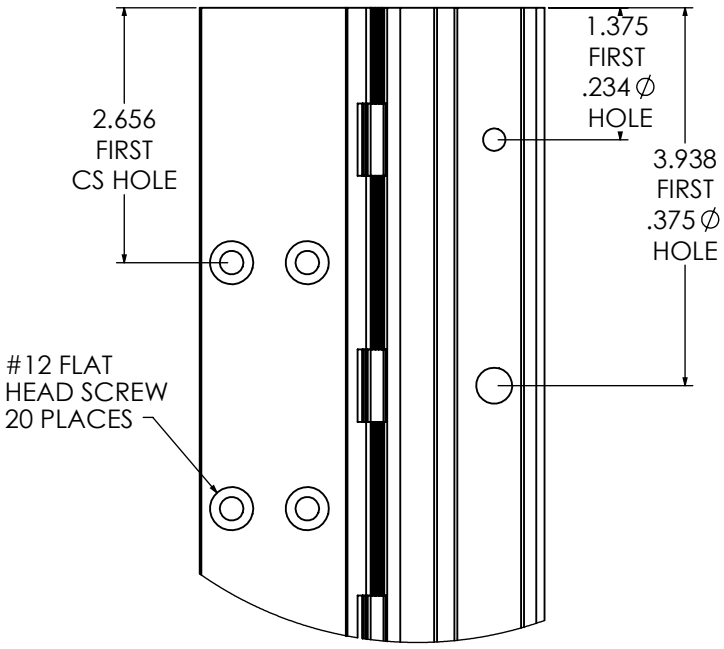

DETAIL A
SCALE 1 : 2